4" Slim Round Panel LED

4" Slim Round Panel LED

Options:

- Wet Location

Dimmable

Specification	
	3Way CCT adjustable
Model No.	VO-RP4W10-120-D-3WY WH
Size	4.9"x0.8" (Lamp) 3.3"X3.3"X1.2" (Driver)
Beam Angle	140°
Input	120V 60Hz
Power Factor	>0.9
Dimmable	Yes
Power (W)	10W
Luminous Flux	750LM
Color Temperature	3000K/4000K/5000K adjustable
CRI	>80
SDCM	<7
Life Tume (Hrs)	50000
Certification Requirements	ETL / ES /5 Years

Votatec
Innovation & Quality
www.votatec.ca

4" Slim Round Panel LED

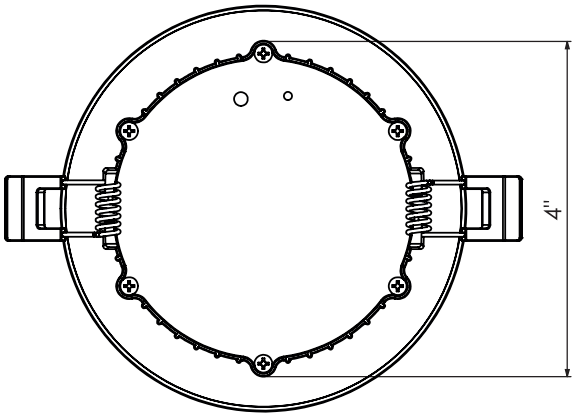

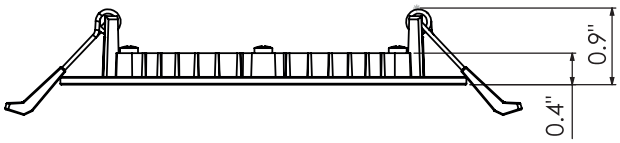

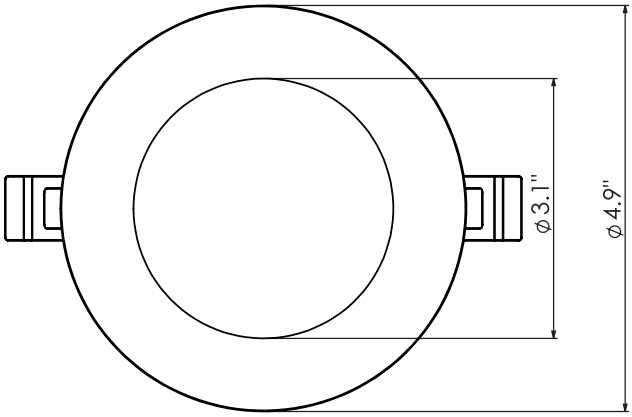

Features

- Safe - This downlight is IC Rated and airtight junction box, protecting from overheating and designed to be installed in the ceiling surrounded by insulation.
It is ETL certified, which means it has met the nationality recognized safety requirements.
- Energy Efficient - With Energy Star labled, it consumes only 10 watts, equivalent to 60W halogen.That's so easy to save up to %90 on the electric bill.
- Long Lifespan - The lifespan is as long as 50/000 hours. we provide 5 years warranty and lifetime technical support.

Warranted for 5 Years
Intertek
ENERGY STAR
Dimmable
IC RATED
CCT Switch
Multi Voltage 120-347V
WET LOCATION